Microelectronic gauge pressure sensors
HP-P Series

- ► **Resolution 0,01 %**
- ► **Operating pressure range from 0-0,06 to 0-150 MPa**
- ► **Operating temperature range from -45 to +200 °C**
- ► **Electrical insulation strength – 700 V**
- ► **Titanium body**

Applications

- **Industrial automatics**
- **Oil and gas industry**
- **Hydraulics/Pneumatic**
- **Pumping stations/ Compressors**
- **Heat metering**

■ **The sensors are intended for proportional conversion of pressure into electric signal.**

New solutions in pressure measurement – "Silicon-on-Sapphire" Technology

ᴠ Sensitive element of pressure sensors is a two-layer sapphire-titanium diaphragm with monocrystal silicon resistance strain gauges.

ᴠ Monocrystal sapphire diaphragm is a perfect elastic element that due to connection with titanium acquires the best quality as to the deformation level, and preserves its elastic properties up to +400°C.

ᴠ Monocrystal silicon resistance strain gauges are automatically connected with sapphire (heteroepitaxy method) and provide almost no hysteresis or fatigue effects.

ᴠ Exceptional insulating properties and radiation resistance of sapphire enable to use the sensitive element within temperature range from -200 to +350°C under the effect of high electromagnetic interferences and radiation.

ᴠ Strain gauges elements are manufactured in groups by solid-state micro-electronic methods and provide high quality and good repeatability of the output parameters.

Lomonosov str.6, building 2, 302040 Orel, Russia
Tel.: +7(4862) 30-34-50, e-mail: mail@microtensor.ru

Datasheet

1 Nominal, overload and burst pressure

Designation	Nominal pressure, MPa	Overload pressure, MPa	Burst pressure, MPa
HP-P 0,06...	0...0,06	-0,1...0,12	0,18
HP-P 0,1...	0...0,1	-0,1...0,2	0,3
HP-P 0,16...	0...0,16	-0,1...0,32	0,48
HP-P 0,25...	0...0,25	-0,1...0,5	0,75
HP-P 0,4...	0...0,4	-0,1...0,8	1,2
HP-P 0,6...	0...0,6	-0,1...1,2	1,8
HP-P 1...	0...1	-0,1...2	3
HP-P 1,6...	0...1,6	-0,1...3,2	4,8
HP-P 2,5...	0...2,5	-0,1...5	7,5
HP-P 4...	0...4	-0,1...8	12
HP-P 6...	0...6	-0,1...12	18
HP-P 10...	0...10	-0,1...20	30
HP-P 16...	0...16	-0,1...32	48
HP-P 25...	0...25	-0,1...50	75
HP-P 40...	0...40	-0,1...80	120
HP-P 60...	0...60	-0,1...120	180
HP-P 100...	0...100	-0,1...150	250
HP-P 150...	0...150	-0,1...165	300

2 Temperature ranges

2.1 Operating temperature range

2.1.1 Version 1 . . . . . .from - 45 to + 125°C

2.1.2 Version 3 . . . . . .from 0 to + 200°C

2.2 Limiting temperature range

2.2.1 Version 1 . . . . . from - 60 to + 130°C

2.2.2 Version 3 . . . . . .from 0 to + 205°C

3 Accuracy parameters

3.1 Resolution, % FS 0,01

3.2 Non-linearity, % FS

3.2.1 For HP-P 0,06... - HP-P 1,6... . . . . .±0,2

3.2.2 For HP-P 2,5... - HP-P 150... . . . . ±0,15

3.3 Variation, % FS 0,05

3.4 Output signal repeatability, % FS . . . . . ±0,05

3.5 Long-term stability of the output signal range within 12 months, %

3.5.1 For HP-P 0,06... - HP-P 1... . . . . ±0,25

3.5.2 For HP-P 1,6... - HP-P 150... . . . . ±0,15

3.6 Output signal error caused by the influence of overload pressure, % FS

for zero output signal . . . . . .±0,2

for output signal range . . . . . .±0,05

3.7 Additional ambient temperature error, % FS/1°C

3.7.1 For zero output signal

3.7.1.1 V type . . . . . .±0,05

3.7.1.2 C type . . . . . 0,03±0,05

3.7.2 For output signal range

operating temperature range from -45 to +125 °C . . . . . .±0,05

operating temperature range from +125 to +200 °C . . . . . .-0,05±0,025

3.8 Additional vibration error of the output signal, % FS . . . . . .±0,05

3.9 Zero output signal error caused by the torque effect on the sensors, % FS

3.9.1 For HP-P 0,25... - HP-P 1... . . . . ±0,25

3.9.2 For HP-P 0,06... - HP-P 0,16...; HP-P 1,6... - HP-P 150... . . . . .±0,025

4 Electrical characteristics

4.1 Output signal at room temperature, mV

4.1.1 Zero output signal . . . . . .±10

4.1.2 Output signal range (FS) . . . . . .150±50

for HP-P 0,06 . . . . . .100±35

4.2 Strain gauge bridge resistance at room temperature, kOhm 3,40-4,85

4.3 Temperature resistance coefficient of the strain gauge bridge, K^{-1}

4.3.1 V type . . . . . .$(1,75\pm0,1)\cdot10^{-3}$

4.3.2 C type . . . . . .$(1,2\pm0,2)\cdot10^{-3}$

4.4 Insulation resistance, MOhm

at room temperature 100

at the upper ambient temperature value 20

4.5 Electrical insulation strength (AC voltage), V 700

4.6 Power supply

4.6.1 V type - stabilized DC voltage, V 1-10

4.6.2 C type - stabilized DC, mA 0,2-2

Output signal is rated by the voltage 10 V and by the current 1,5 mA.

5 Mechanical characteristics

5.1 Vibration resistance (sinusoidal vibration):

Frequency range, Hz . . . . . from 10 to 5000

Acceleration amplitude, m/s^2 500

5.2 Shock resistance (multiple mechanical shocks):

Shock acceleration peak, m/s^2 1000

Shock pulse width, ms 2

5.3 Torque effect while installation:

Operating pressure range, MPa	Thread code	
	M, G	K, MA, GA
0,06-10	30-35 N·m	30-35 N·m
16-40	50-60 N·m	
60-150	80-100 N·m	

6 Operating conditions

6.1 IP level IP54

6.2 Sensor body (pressure connection) and membrane are made of titanium alloy with 87 % of titanium.

6.3 Pressure media - gases, liquids and their mixtures not aggressive to the titanium alloy (air, sea water, 5 % vitriol acid , chlorine water, chloride solutions, oils, ethyne etc)

7 Overall and mounting dimensions

HP-P 0,06(0,1; 0,16)-...-К

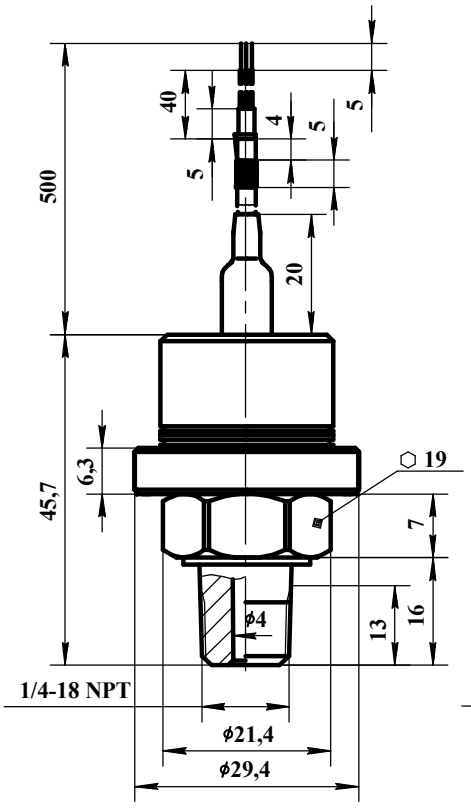

Drawing 1

HP-P 0,25(0,4...1)-...-К

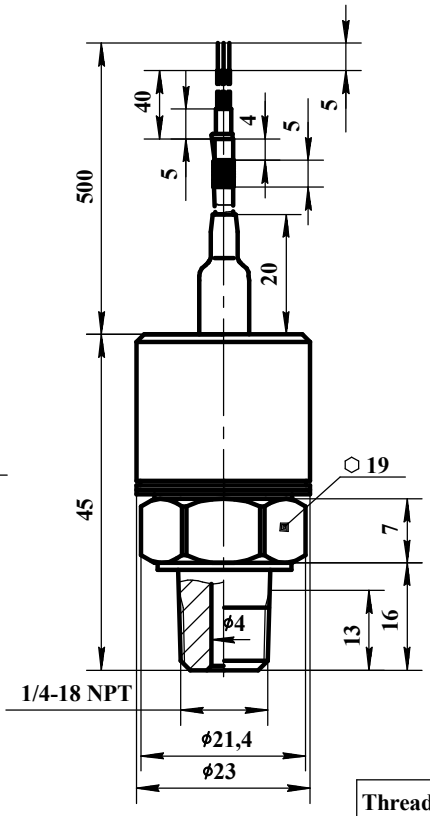

Drawing 2

Thread	Code
1/4-18 NPT	К

(in accord with DIN 3866)

HP-P 1,6(2,5...100)-...-К

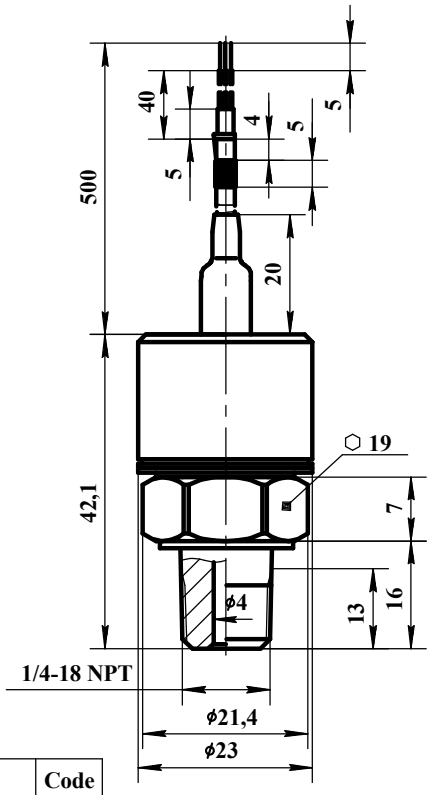

Drawing 3

7.1 Thread design

HP-P 0,06(0,1...100)-...-M(G)

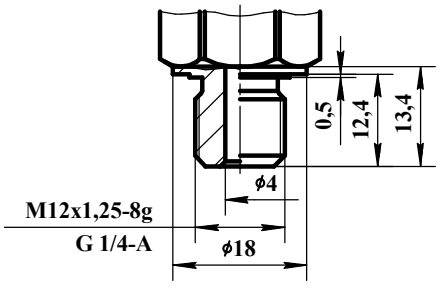

Thread	Code
M12x1,25-8g	M
G1/4-A	G

HP-P 0,06(0,1...150)-...-MA(GA)

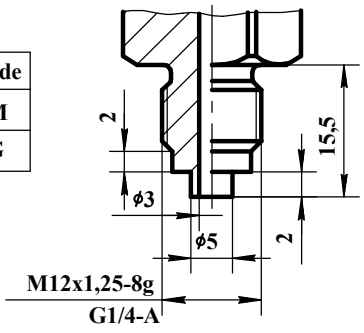

Thread	Code
M12x1,25-8g	MA
G1/4-A	GA

8 Circuit diagram

"Closed bridge" diagram

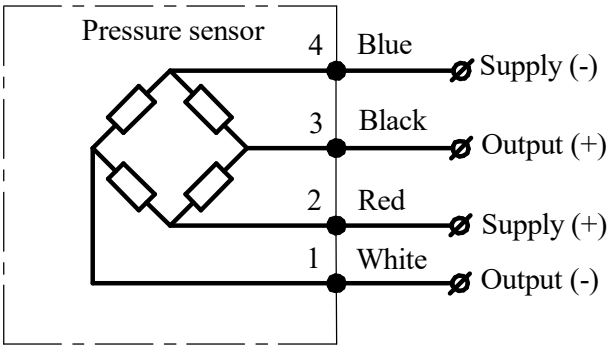

9 Mounting diagrams

HP-P 0,06(0,1...100)-...-M(G)

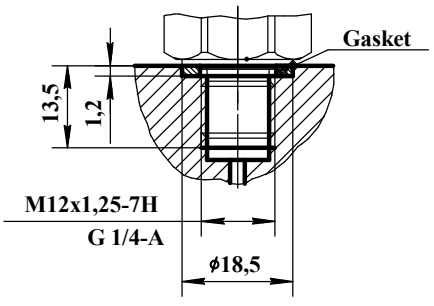

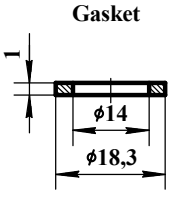

Material - annealed copper

HP-P 0,25(0,4...150)-...-MA(GA)

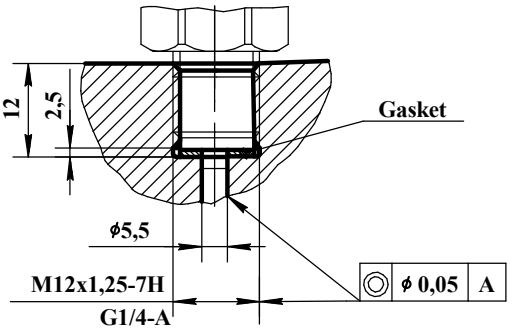

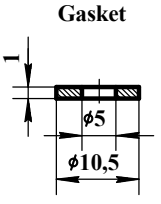

Material - annealed copper

10 Type designation

HP-P XXX - XX - X - XX - X

Series

Upper gauge pressure limit

0,06; 0,1; 0,16; 0,25; 0,4; 0,6; 1; 1,6; 2,5; 4;
6; 10; 16; 25; 40; 60; 100; 150 MPa

Operating ambient temperature range

Version 1 - from - 45 to + 125 °C;
Version 3 - from 0 to + 200 °C

Curcuit

0 - “closed bridge”circuit

Power supply type

V - stabilized DC voltage (1-10 V);
C - stabilized DC (0,2-2 mA)

Thread code

K - 1/4-18 NPT
M - M12x1,25-8g;
G - G1/4-A
MA - M12x1,25-8g, end seal;
GA - G1/4-A, end seal

Electrical connection

L - flexible cable 500 mm length

Order example of pressure sensor

Pressure sensor of HP-P series, intended for pressure conversion from 0 to 0,1 MPa, for operation within temperature range from 0 to + 200 ℃, with “closed bridge” circuit, circuit, DC voltage power supply, M12x1,25-8g thread, end seal and flexible cable 500 mm length:

Pressure sensor HP-P 0,1-30-V-MA-L.

Note: if wished, typical size and cable length (standard 500 mm) can be changed, in this case - in the order should be denoted thread designation and the required length should be added to the cable code L, for example:

Pressure sensor HP-P 0,1-30-V-M12x1-8g-L200.

11 Marking

Marking on the sensor body must contain following information: series, upper gauge pressure limit is in MPa, version of the operating temperature range, circuit type, power supply modification, thread code and order number